S1 – EXPANSION CARD I/O

version 070519

The S1 card is an addition card employed to add new I/O to the basic controller. For compatibility see the technical sheet of the basic controller. The additional functions with this card are described in the below table.

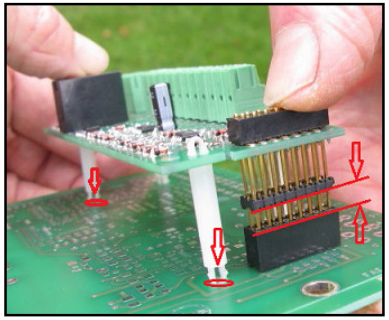

Assembly Operations

Turn off the power controller. Place the white spacers and the pins of the male connector above the holes and the female connector provided in the basic card. Make sure that every pin of the male connector are aligned to the female connector. Hold the hands as shown in the picture and push strongly towards the below card until the spacers anchor down. Once anchored the card, make sure that the pins of the male connector are completely inserted in the female connector. If the pins are lifted up, push them down until completely inserted.

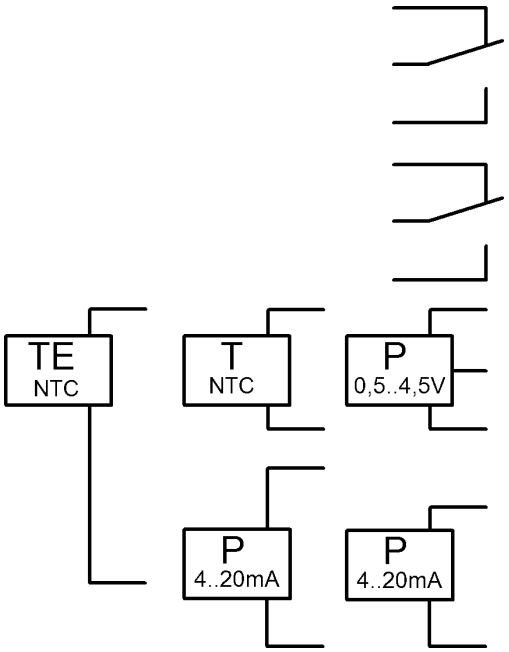

Mors.	Descriptin	Application	Page
NC3	Relay 3 closed norm. contact output	Settable output. In the default setting the relay is enabled (NO-COM closed eachother) and is disabled by moving to the position represented in the picture in emergency case.	
COM3	Relay 3 common contact output (1A-250V~/3A-30V=)		
NO3	Relay 3 open norm. contact output		
NC2	Relay 2 closed norm. contact output	Settable output. In the default setting the relay is enabled (NO-COM closed eachother) and is disabled by moving to the position represented in the picture in emergency case.	
COM2	Relay 2 common contact output (1A-250V~/3A-30V=)		
NO2	Relay 2 open norm. contact output		
+5V	Power supply output 5V=(max 15mA)	Ratiometric pressure sensor power supply and NTC	
0V	Ground I/O	Mass for analogical input	
IN 2	Analogical input 2, type 0,5…4,5V / ntc (10 kΩ @25°C, β3435), (Ri = 10 kΩ)	Ratiometric pressure transducers input and NTC	
4.20	Analogical input 2, type 4…20mA (Ri = 100 Ω)	Pressure transducers 4..20mA inputs. The higher signal is interpreted as analogical input 2.	
4.20	Analogical input 3, type 4…20mA (Ri = 100 Ω)		
TE	Ambient sensor input NTC (10 kΩ @25°C, β3435)	Activation of variable bandwidth and load partialization functions	
+V	Power supply output 12V= (max 100mA)	Pressure transducers 4..20mA power supply	
0V	Ground I/O	(-) Mass for inverter/Slave device	
OUT	Analogical output 2, tipo 0...10V= (max 15mA)	(+) Control signal for inverter/Slave device	